Hilroy

80 Pages
27.6 cm x 21.2 cm

Ruled 7 mm • Ligné 7 mm

EXERCISE BOOK
CAHIER D'EXERCICES

NAME/NOM Cole Shanks

SUBJECT/SUJET ELEC 301

ASSEMBLED IN CANADA WITH IMPORTED MATERIALS
ASSEMBLÉ AU CANADA AVEC DES MATIÈRES IMPORTÉES

12107

Lecture 0

9/05/19 LEC

Course Overview:

Mini Projects (15% each) → 60%
BiWeekly tests (10% each) → 40%

Office Hour → KAIS 3040 or 3041

Mini Project 2 DIFFICULT
↳ 3weeks extended, so
also for test then

Email Subject: ELEC301F19 followed by a space and question/subject.

9/09/19 LEC

Lecture 1

Figure 3 → Figure 4 (Miller's Thm)

9/10/19 LEC

Lecture 2

9/12/19 LEC

Lecture 3

$20\log(\sqrt{2}) = 3DB$ *0.707 used often as a point

9/16/19 LEC

Lecture 4

*Review Bode plots (Phase and amplitude)

Low-Pass Filter

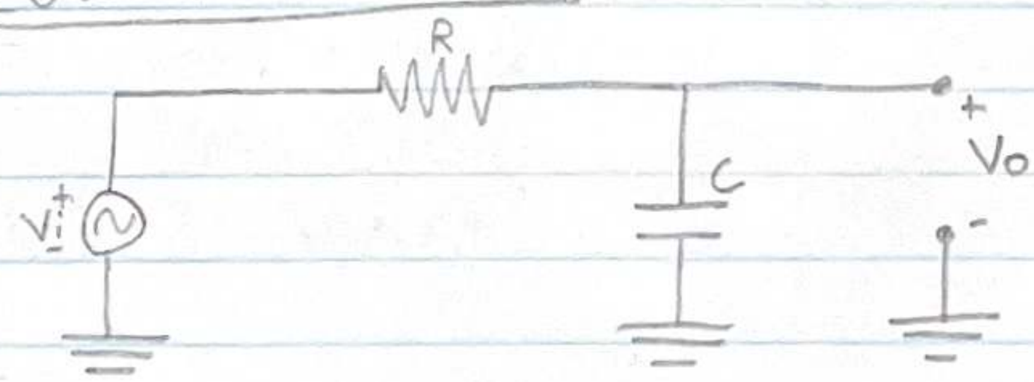

Questions:

① Capacitor @ high $\omega \rightarrow$ short @ low $\omega \rightarrow$ open

How does C values influence this behaviour?

Band-Pass Filter

$C_1 >> C_2$

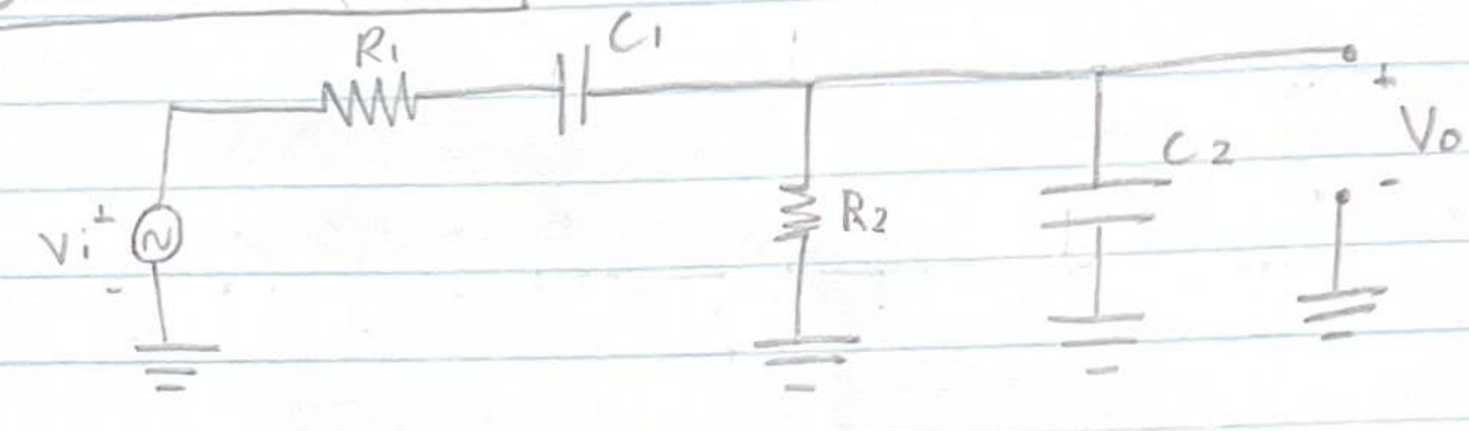

Large Blocking Capacitor:

Because $C_1 >> C_2$

$\hookrightarrow$ terms like $\left(\frac{1}{R_2 C_2} + \cancel{\frac{1}{R_1 C_1}}^{\,\emptyset}\right) \rightarrow \frac{1}{R_2 C_2}$

9/17/19
LEC

Lecture 5

3DB (half power point)

P7.4 * Understand this slide

Find Cutoff Frequencies: (High and Low)

① Poles are known

② Have circuit but don't know poles

P7.10 Short circuit time constants:

- short all other capacitors and V sources and get resistance (a→b thevenin) across the capacitor you're looking at

Lecture 6

9/19/19
LEC

Problem set 2 Q3:

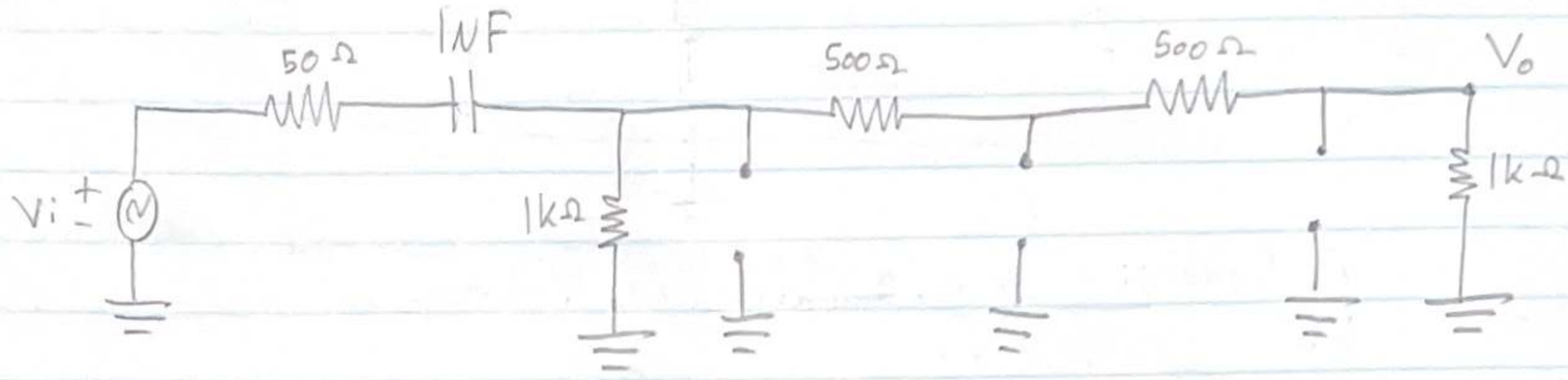

$(1E-6)(50 + 1k \| 2k)$

$= 0.000716 = T_{oc}$

$\rightarrow \dfrac{1}{0.00716} = 1395.35 \rightarrow \omega_{<3DB} = 1395.35/s$

Time constants:

*Important → $\boxed{P > 4}$ (3DB)

$\omega_p = \dfrac{1}{T_{oc}}$

9/23/19
LEC

Lecture 7

Problem Set 2:

$\boxed{Q1}$

$T_{c1}^{oc} = C_1(R_1 + R_2)$ [short source, open C_2]

$T_{c2}^{oc} = C_2 R_2$ [short source, open C_1]

*d_1 = Sum of the open circuit time constants

$\boxed{Q4}$ $\omega_{Z1L} = 100/s$

$\omega_{Z2L} = 0/s$

$\omega_{P1L} = 200/s$

$\omega_{P2L} = 50/s$

What is $\omega_{L3DB} = ?$

$\omega_{L3DB} = \sqrt{(200/s)^2 + (50/s)^2 - 2 \cdot (100/s)^2}$

$= 150/s$

Lecture 9

9/26/19
LEC

PS2 Q5

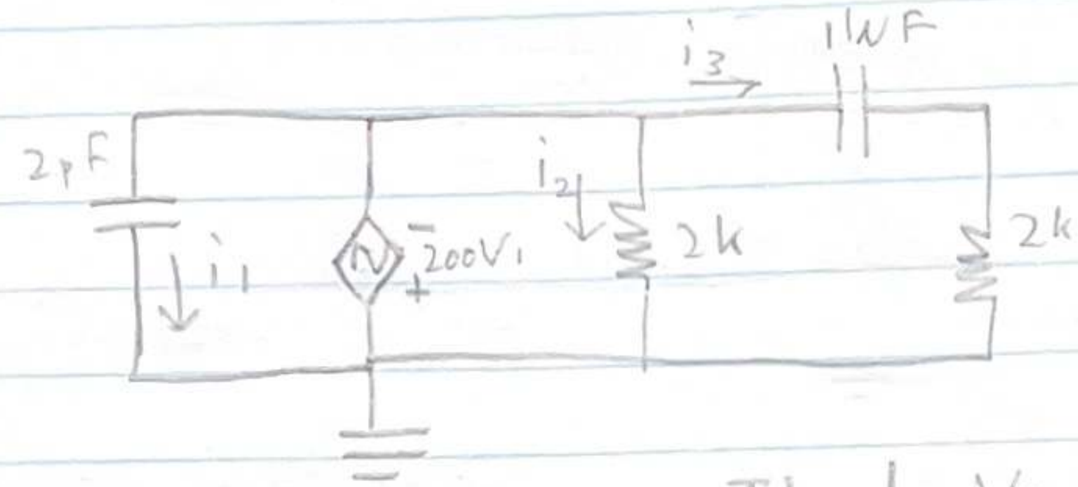

Ideal Vsource
[really 3 parallel circuits]

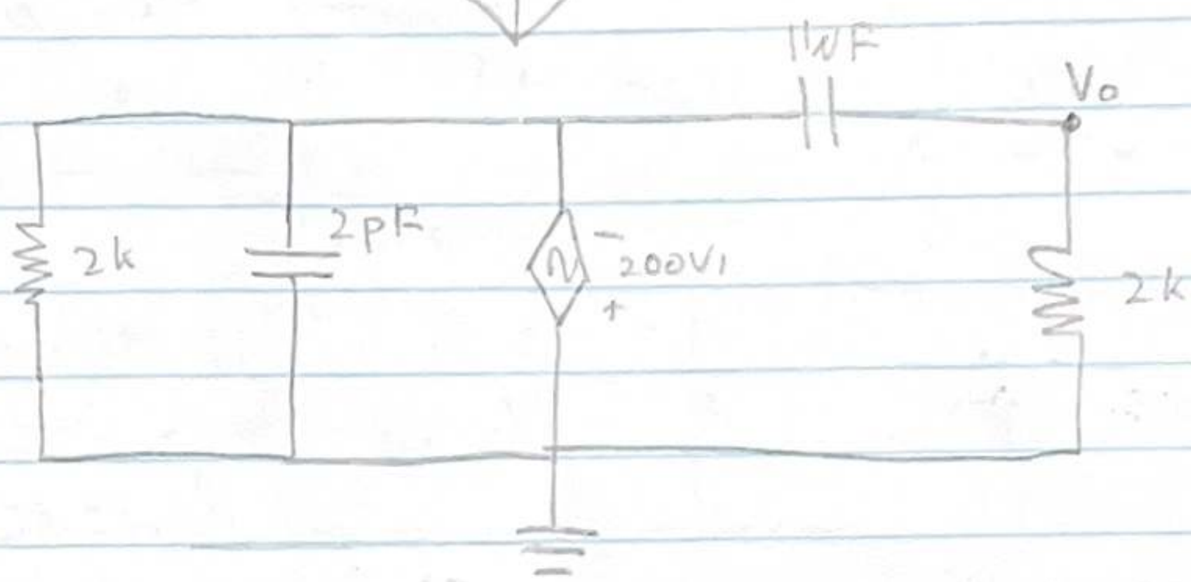

$V_o = i_3 \cdot 2k$

$\cancel{-200V_1 = i_3 \cdot 2k}$

$-200V_1 = i_3\left(\frac{1}{j\omega \cdot 1/N F} + 2k\right)$

$$\frac{V_o}{-200V_1} = \frac{2k}{\frac{1}{j\omega \cdot 1/N F} + 2k} \longrightarrow \left.\frac{V_o}{-200V_1}\right|_{\omega \to \infty} = 1$$

$$\frac{|V_o(j\omega)|}{-200|V_1(j\omega)|} = \frac{1}{\sqrt{2}}$$

3DB is when $\frac{V_o}{V_i} = \frac{1}{\sqrt{2}}$

PS2 Q6

siemens

miller:

$$k = \frac{V_o}{V_\pi} = -5k|||k \cdot \frac{0.1\,\mho \cdot V_\pi}{V_\pi}$$

$$= \frac{-5k}{1k+5k} \cdot 1k \cdot 100m\,\mho$$

$$= -0.833 \cdot 100$$

$$= -83.3$$

$$W_{HP1} = \frac{1}{50\Omega || 50k\Omega || 2.5k\Omega \cdot 88.3pF}$$

$$W_{HP2} = \frac{1}{833\Omega \cdot 1pF}$$

$$A_m = \frac{V_o}{V_i} = \frac{V_o}{V_\pi} \cdot \frac{V_\pi}{V_i}$$

$$= -83.3 \cdot \frac{50k||2.5k}{50k||2.5k + 50} \approx \boxed{-83.3\,\frac{V}{V}}$$

$$W_{LP1} = \frac{1}{(50\Omega + 50k||2.5k)\,2nF}$$

$$W_{LP2} = \frac{1}{6k \cdot 0.1nF}$$

$$T(s) = A_m \cdot \frac{s}{s+W_{LP1}} \cdot \frac{s}{s+W_{LP2}} \cdot \frac{W_{HP1}}{s+W_{HP1}} \cdot \frac{W_{HP2}}{s+W_{HP2}}$$

$$\boxed{W_{L3DB} = 1680/s} \qquad W_{L3DB} = \sqrt{W_{LP1}^2 + W_{LP2}^2}$$

PS1 Q2

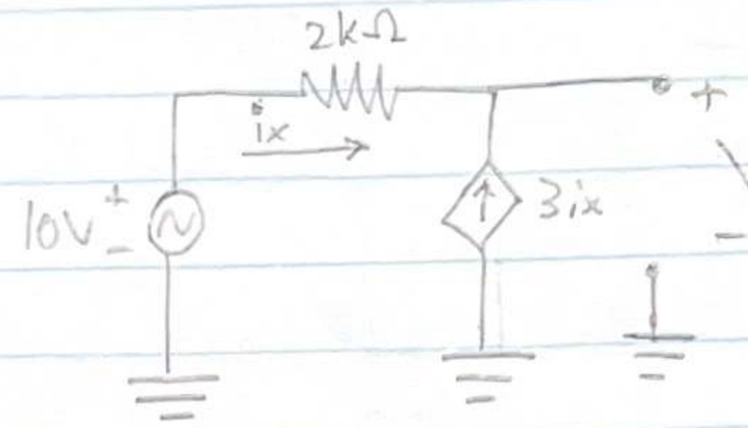

$V_{th} = 10V$ [no current]

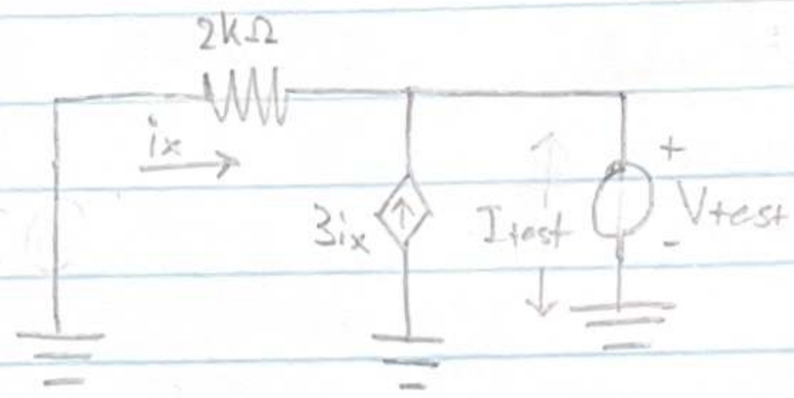

$i_x = \frac{V_{test}}{2k}$ $\quad I_{test} = 4 i_x$

$R_{test} = \frac{V_{test}}{I_{test}} = \frac{i_x \cdot 2k}{4 i_x} = 500\Omega = R_{th}$

9/30/19 LEC

Lecture 10

SS8 The BJT as an amplifier:

10/01/19 LEC

Lecture 11

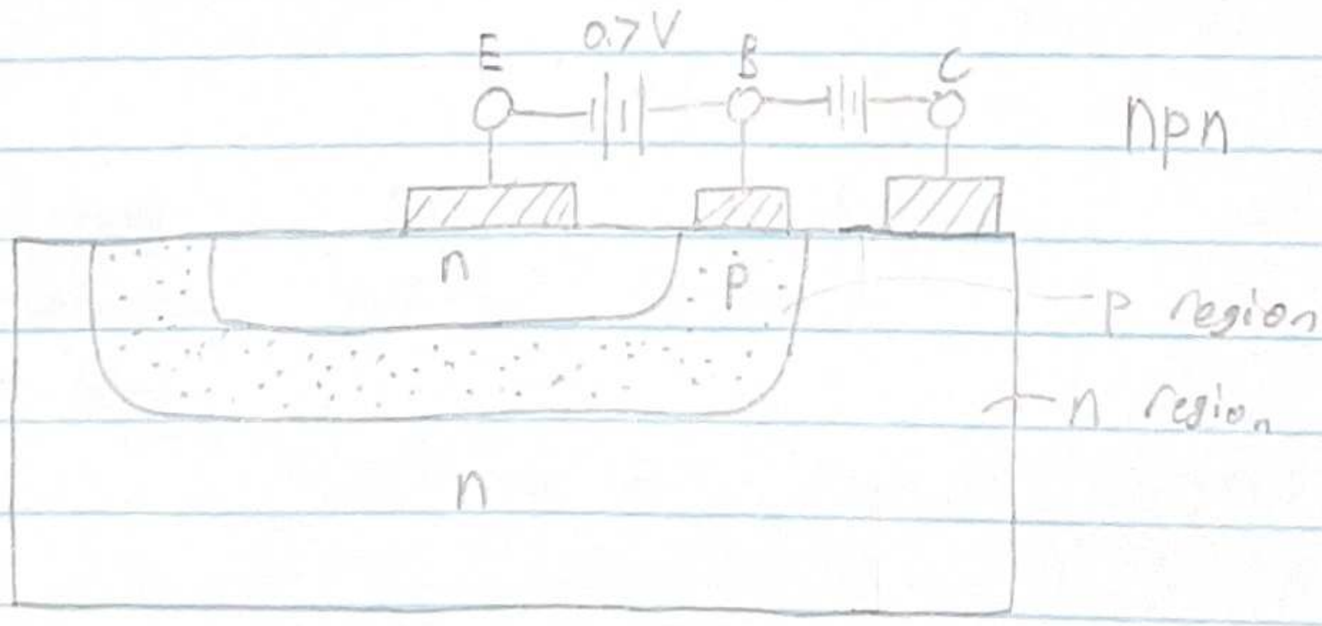

Hybrid-π small signal Model:

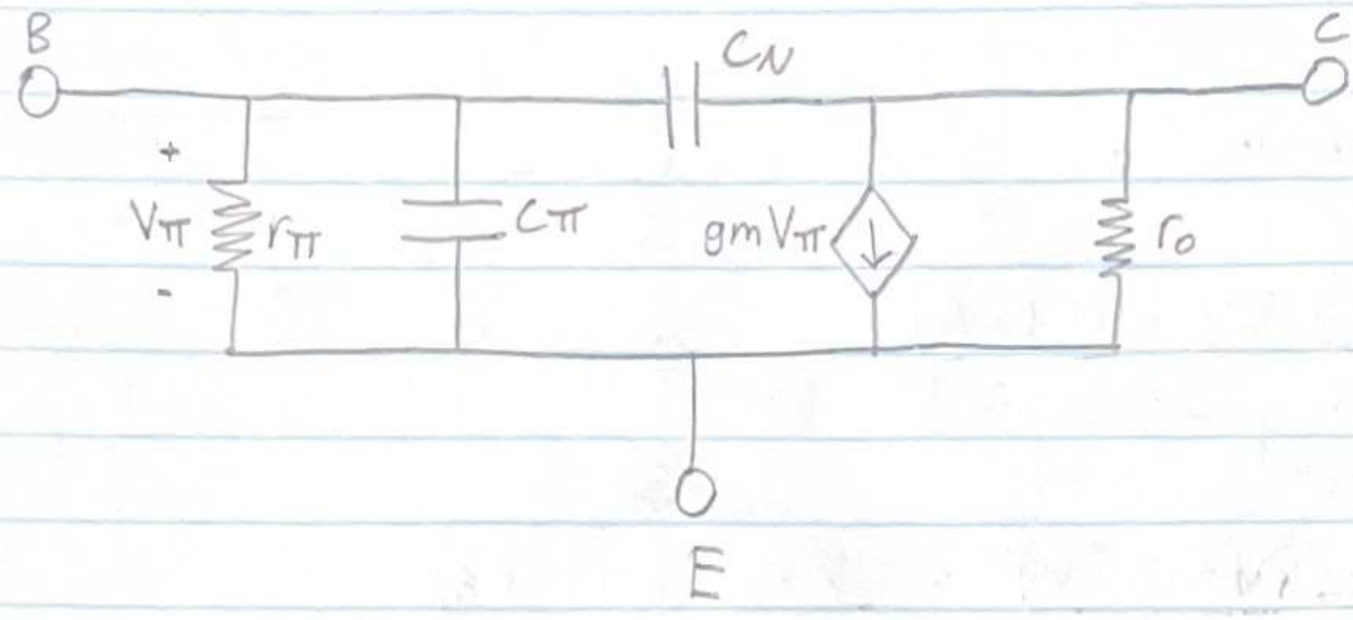

Formulas:

$$i_c = \frac{I_c}{V_t} \cdot V_{be} = g_m V_{be}$$

$$r_\pi = \frac{V_{be}}{i_b}$$

PS3 Q1

$V_{CC} = 15V$

$I_C = 2mA$

$$R_C = \frac{V_{CC} - V_C}{I_C} = \frac{\frac{1}{3}V_{CC}}{I_C} = \frac{5V}{2mA} = \boxed{2.5k\Omega}$$

$I_E \approx I_C = 2mA$

$V_E = V_B - 0.7V = 4.3V$

$$R_E = \frac{4.3V}{2mA} = \boxed{2.15k\Omega}$$

$$R_{B1} = \frac{V_{CC} - V_B}{0.1(2mA)} = \frac{10V}{0.2mA} = \boxed{50k\Omega}$$

$$R_{B2} = \frac{V_B}{0.2mA - I_E/100} = \frac{5V}{0.18mA} = \boxed{27.8k\Omega}$$

Lecture 12

10/03/19
LEC

PS3 Q2

$R_E = \boxed{8k} = R_C$

$I_C = \dfrac{12V - (\frac{2}{3})8V}{8K} = \boxed{0.5mA}$

$R_{B1} = \dfrac{12V - (4V + 0.7V)}{0.5mA/10} = \dfrac{7.3V}{0.05mA} = \boxed{146k}$

$R_{B2} = \dfrac{4.7V}{0.5mA/10 - 0.5mA/100} = \dfrac{4.7V}{0.045mA} = \boxed{104.4k}$

<u>Low frequency Response Small signal:</u>

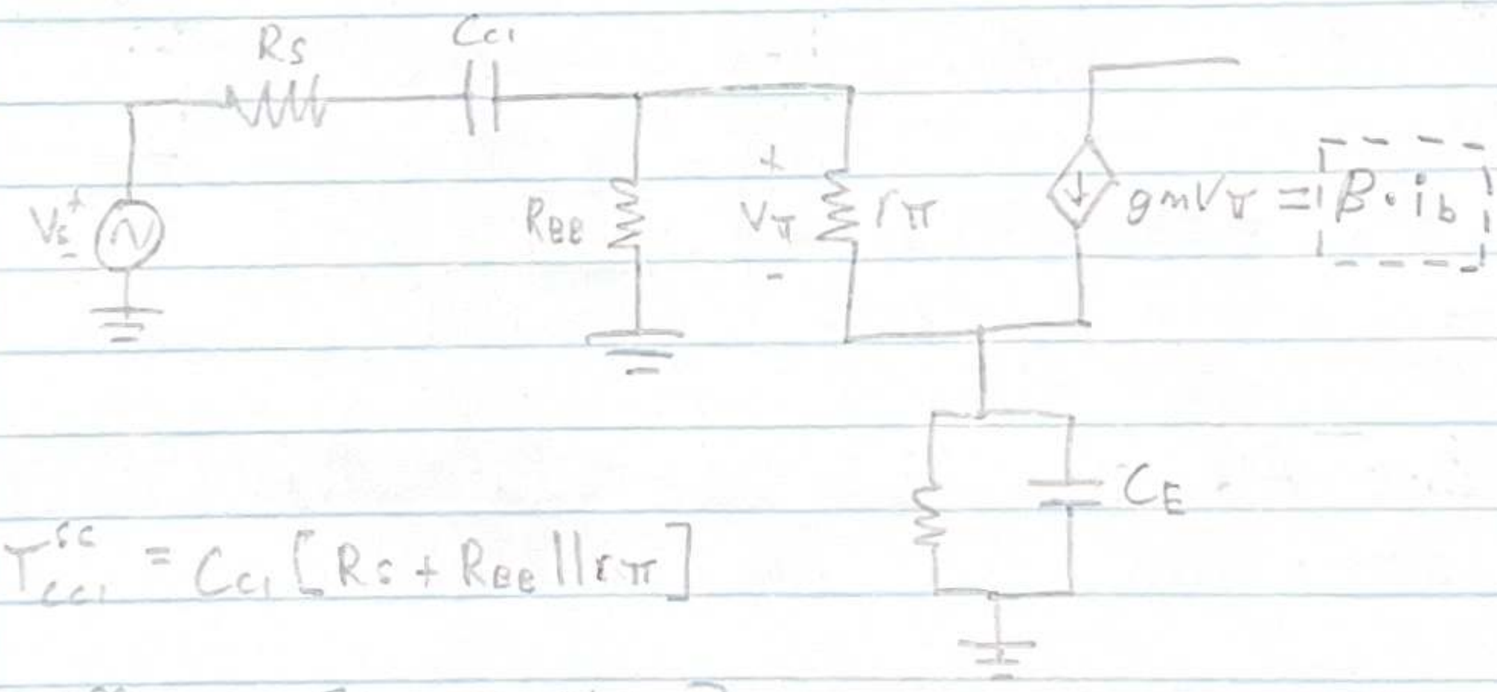

$T^{sc}_{Cc1} = C_{C1}[R_s + R_{BB} \| r_\pi]$

$T^{oc}_{Cc1} = C_{C1}[R_s + R_{BB} \| R_b]$

<u>where:</u>

$R_b = r_\pi + (1+\beta)R_e$

Lecture 13

10/10/19
LEC

ASN Q4

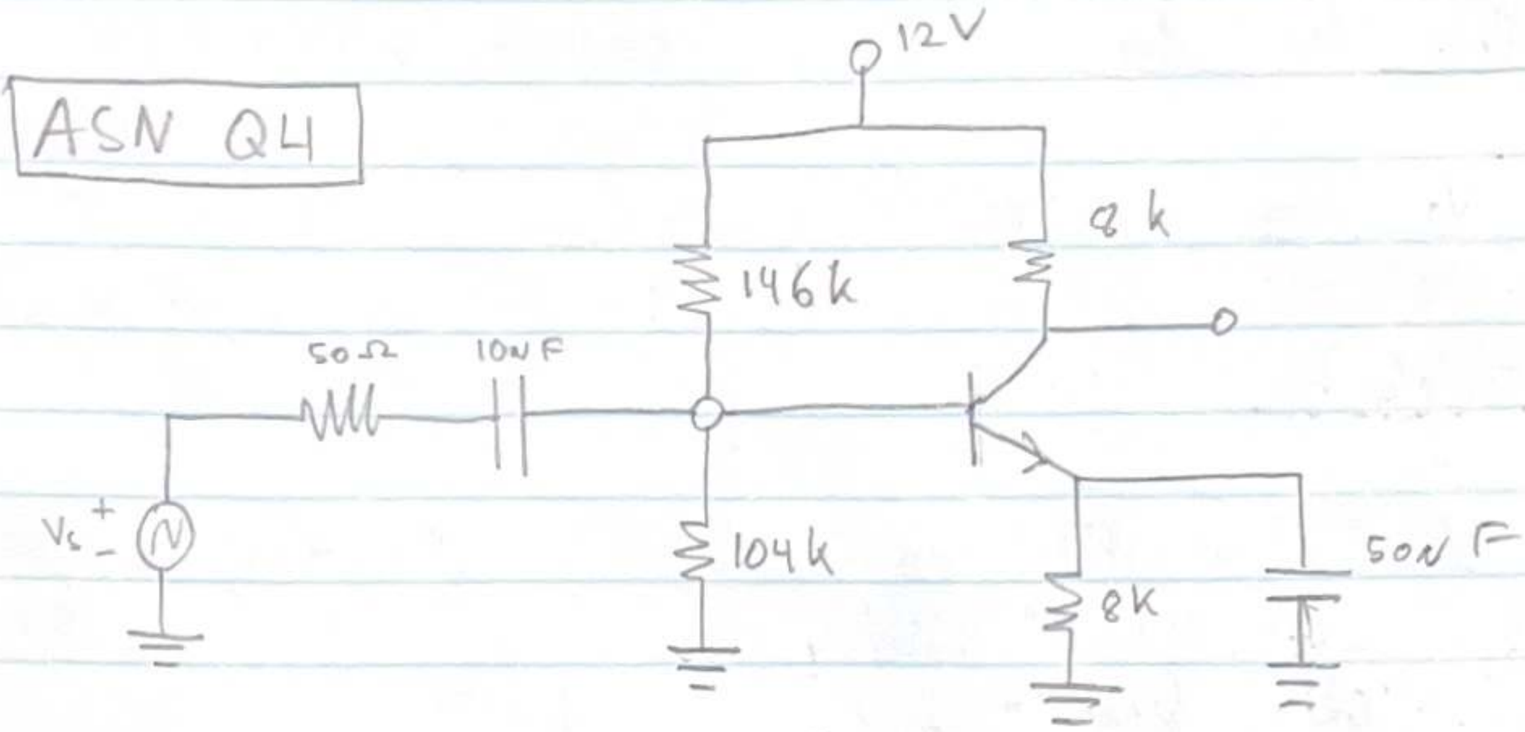

Small signal - Model:

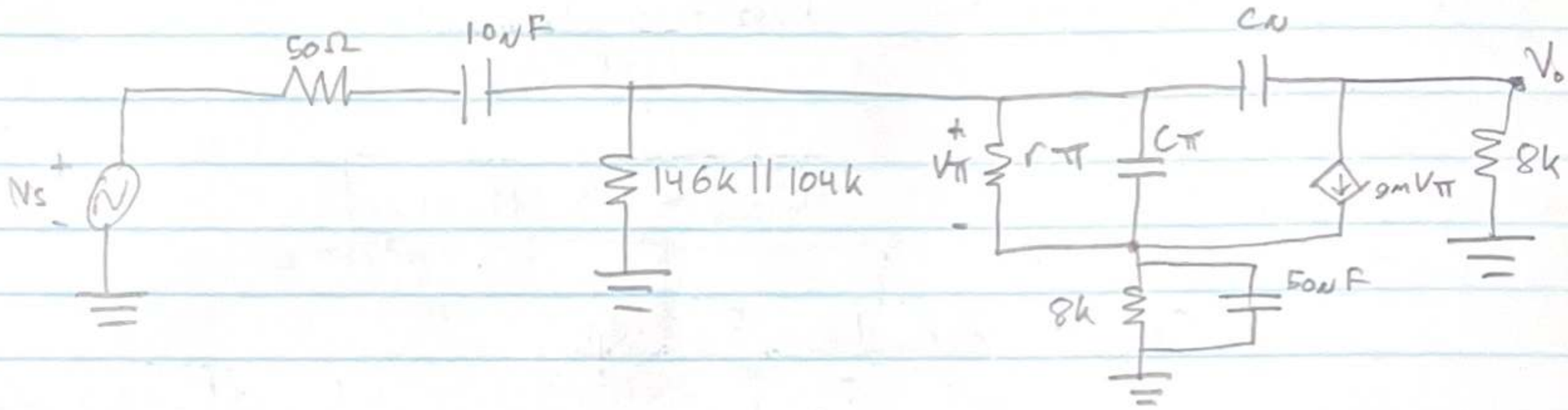

Low FREQ model:

- Open C_π and C_N

Midband FREQ model:

① open C_π and C_N
② short 10uF and 50uF

High FREQ model:

- Short 10uF and 50uF

R_{BB}

*note $r_\pi = 5k$

*note $(5k \| 60.7k) = 4.62k$

Solving for A_M:

$$A_M = \frac{V_o}{V_\pi} \cdot \frac{V_\pi}{V_s} = -20mU \cdot 8K \cdot \frac{4.62k}{4.67k}$$

$$\boxed{A_M = -158\ V/V}$$

Solving for High FREQ:

$$K = \frac{V_o}{V_\pi} = -160, \quad \omega_{HP1} = \frac{1}{(50\Omega \| 4.62k\Omega)(C_\pi + C_\mu \cdot 161)}$$

$$\omega_{HP2} = \frac{1}{(2pF)(8k)}$$

$$\boxed{\omega_{H3dB} = 43.4M\ rad/s}$$

Solving for Low FREQ:

Zero @ 50uF Capacitor:

$$8K + \frac{1}{SC_E} \rightarrow \infty \quad [\text{For } g_m V_\pi = 0]$$

Lecture 14

10/15/19
LEC

SS 11.5 Midband Analysis:

$$A_M = \frac{V_o}{V_s} = \frac{V_o}{V_\pi} \cdot \frac{V_\pi}{V_s}$$

$$\frac{V_o}{V_\pi} = -g_m R_C \| R_L \quad , \quad \frac{V_\pi}{V_s} = \frac{-R_e \| r_\pi/1+\beta}{R_e \| r_\pi/1+\beta + R_s}$$

$A_M =$

PS4 Q2

$$\frac{127k}{186k+127k} = 0.41$$

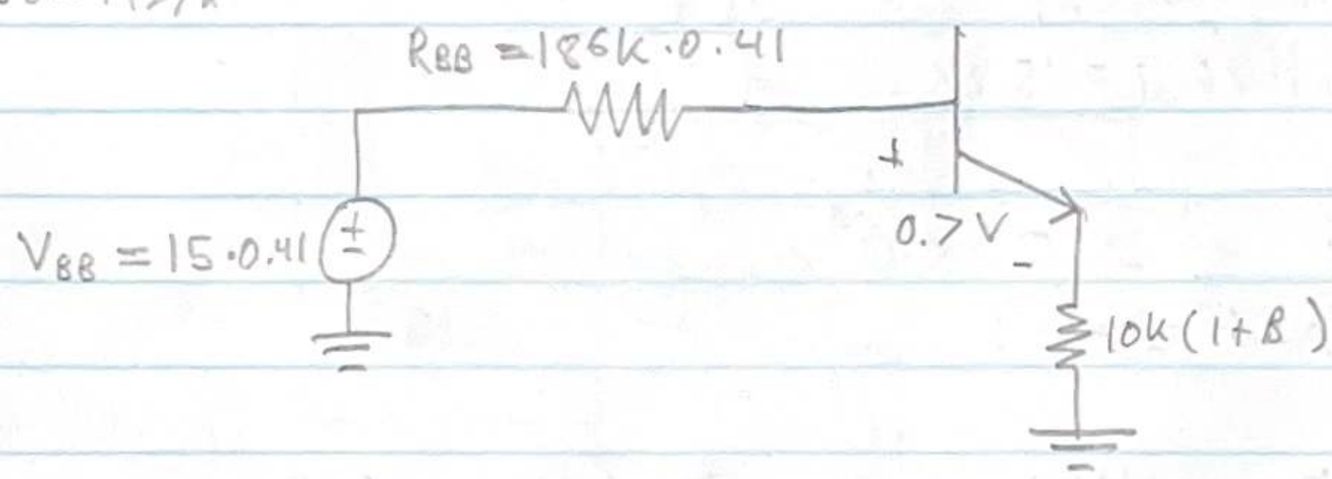

$$V_{BB} = I_B R_{BB} + 0.7V + I_B(10k)$$

$$I_B = \frac{15 \cdot 0.41 - 0.7}{186k \cdot 0.41 + 1.01M\Omega} = 5nA$$

$$I_C = \beta I_B = 500nA$$

$g_m = 20m\mho \quad , \quad V_\pi = 5k$

Lecture 15

10/17/19
LEC

*No 1/3 rule for already biased circuits
ie: Q1, Q3

PS3 Q5

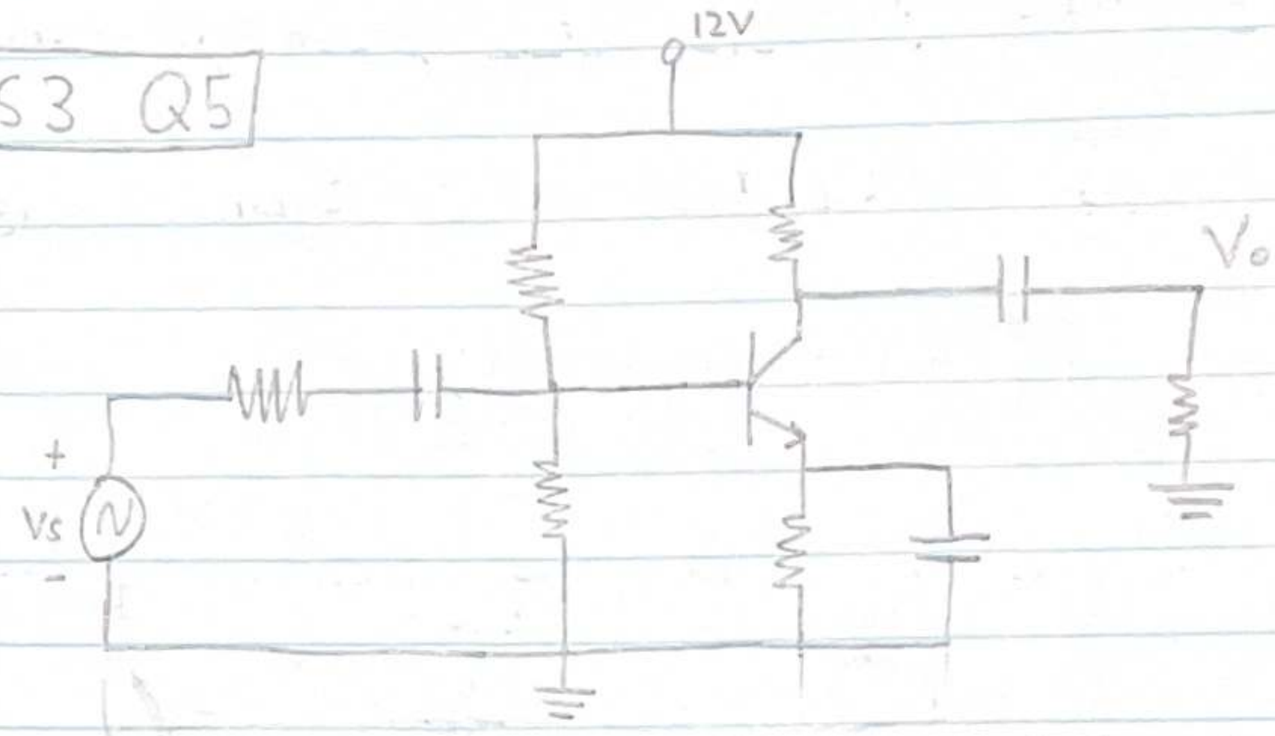

$I_C = 2mA$

$\beta = 100$

$g_m = 80mV$

$r_\pi = 1.25k$

$r_{BB} = 36.5 \| 26.1 = 15.2k$

*Use model from SS 10.4

$$\omega_{LP3} = \frac{1}{4k \cdot 0.5nF} = 0.5 \times 10^3 / sec$$

$$T_{CE}^{sc} = 50nF \cdot 2k \| \left(\frac{r_\pi + r_{BB} \| 50}{1+\beta} \right)$$ ✓ Higher FREQ dominant pole

* $T_{CE}^{sc} < T_{CC1}^{sc}$

$$T_{CC1}^{sc} = 50nF \cdot (50\Omega + r_{BB} \| r_\pi)$$

$$\omega_{LP2} = \frac{1}{T_{CS}^{sc}} = 1.666 \times 10^3 / s$$

Lecture 16

10/21/19
LEC

Questions

① I_C vs V_{CE} with variable V_{BE}, sweep parameters for V_{be}

② Transconductance $g_m = \frac{I_C}{V_T}$ 'or' from slope of I_C vs V_{be}

0.6 – 0.7

10/24/19
LEC

Lecture 17

(CASCODE AMPLIFIER)

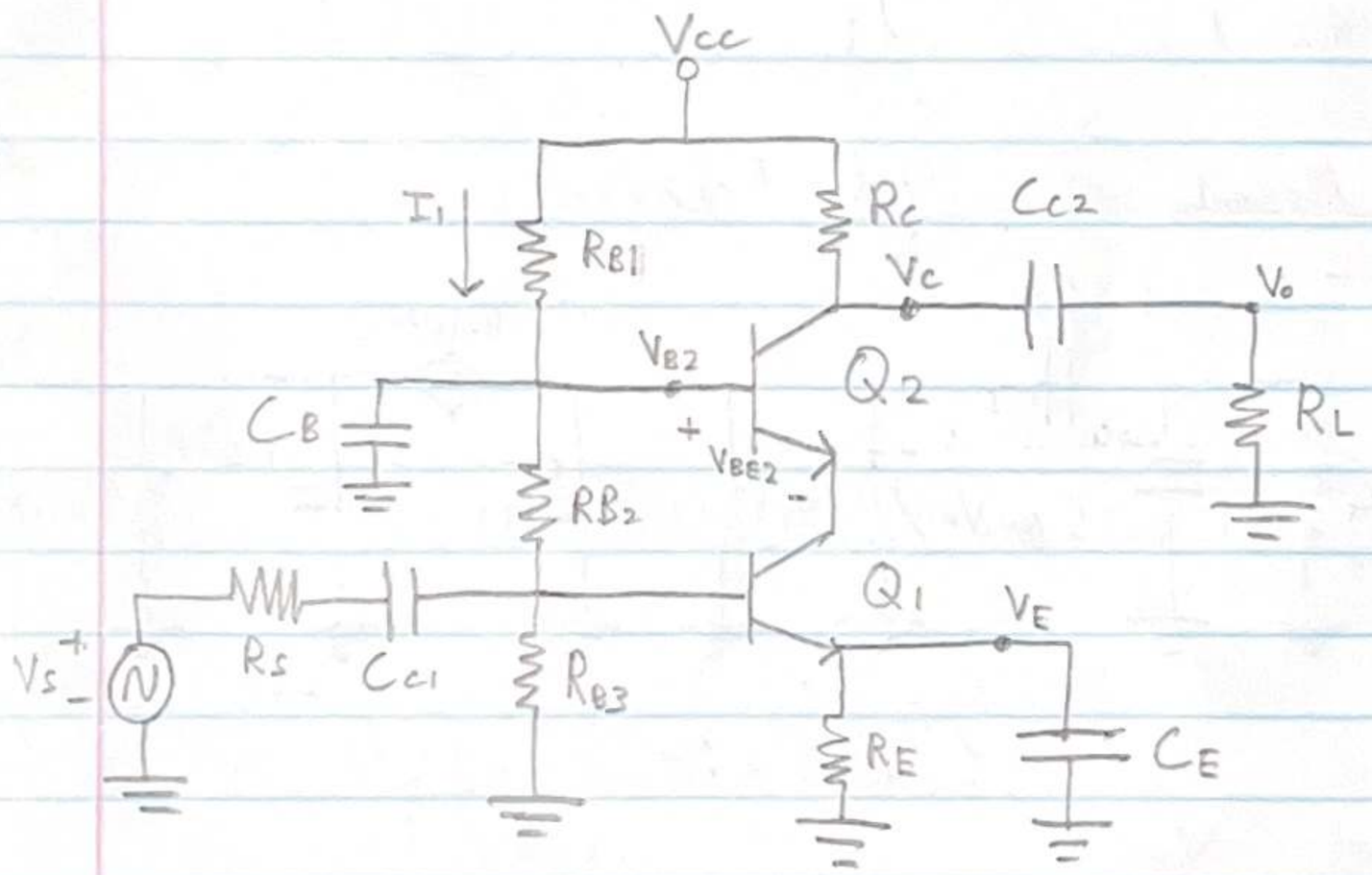

1/4 Rule Biasing

*Note: $V_{B1} = \frac{1}{4}V_{CC} + V_{BE1}$ (By biasing) $V_{BE1} \approx 0.7V$

$I_1 = 0.1 I_E$

① $V_{CC} - V_C = \frac{1}{4} V_{CC}$

② $V_E = \frac{1}{4} V_{CC}$

③ $V_{B2} = \frac{1}{2} V_{CC} + V_{BE2}$ $V_{BE2} \approx 0.7V$

$$r_\pi = \frac{\beta V_T}{I_c}$$

Small signal Model at MidBand:

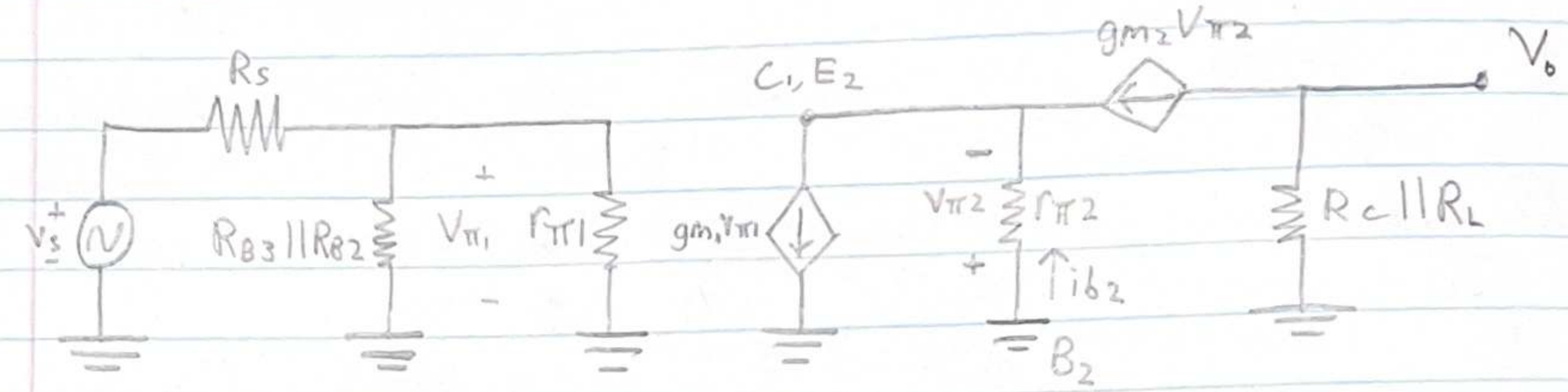

$$g_{m1} V_{\pi 1} = \frac{V_{\pi 2}}{r_{\pi 2}} + g_{m2} V_{\pi 2}$$

$$\frac{\beta}{r_{\pi 1}} V_{\pi 1} = \left(\frac{1+\beta_2}{r_{\pi 2}}\right) V_{\pi 2}$$

Small Signal Model at High Frequency:

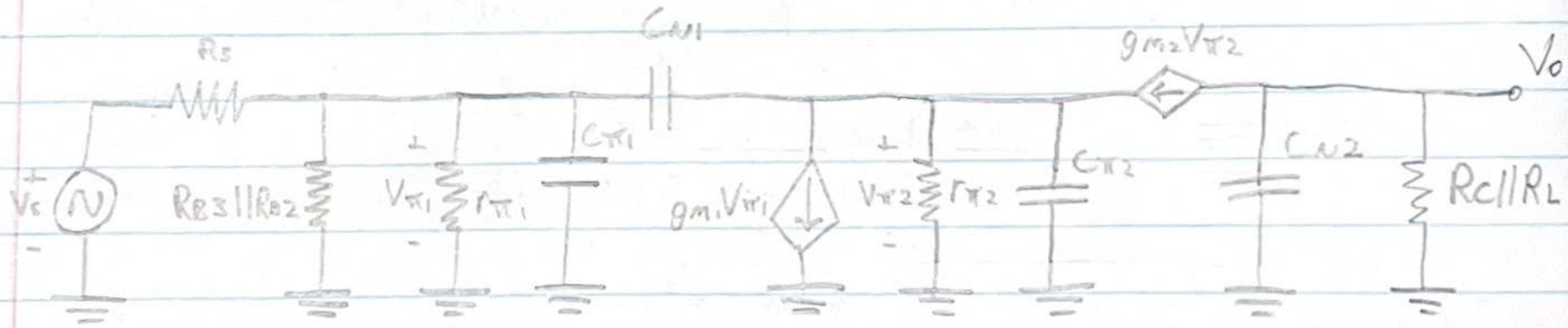

$$A_M = \frac{V_o}{V_{\pi 2}} \cdot \frac{V_{\pi 2}}{V_{\pi 1}} \cdot \frac{V_{\pi 1}}{V_s}$$

Calculated above

$$= -g_{m2} R_c \| R_L \cdot 1 \cdot \frac{R_{B3} \| R_{B2} \| r_{\pi 1}}{R_{B3} \| R_{B2} \| r_{\pi 1} + R_s}$$

Lecture 14

10/31/19
LEC

Ss 14.1 Figure 1 → Figure 2 [small signal model]

$g_\pi = \frac{1}{r_\pi}$

PS5 Q1

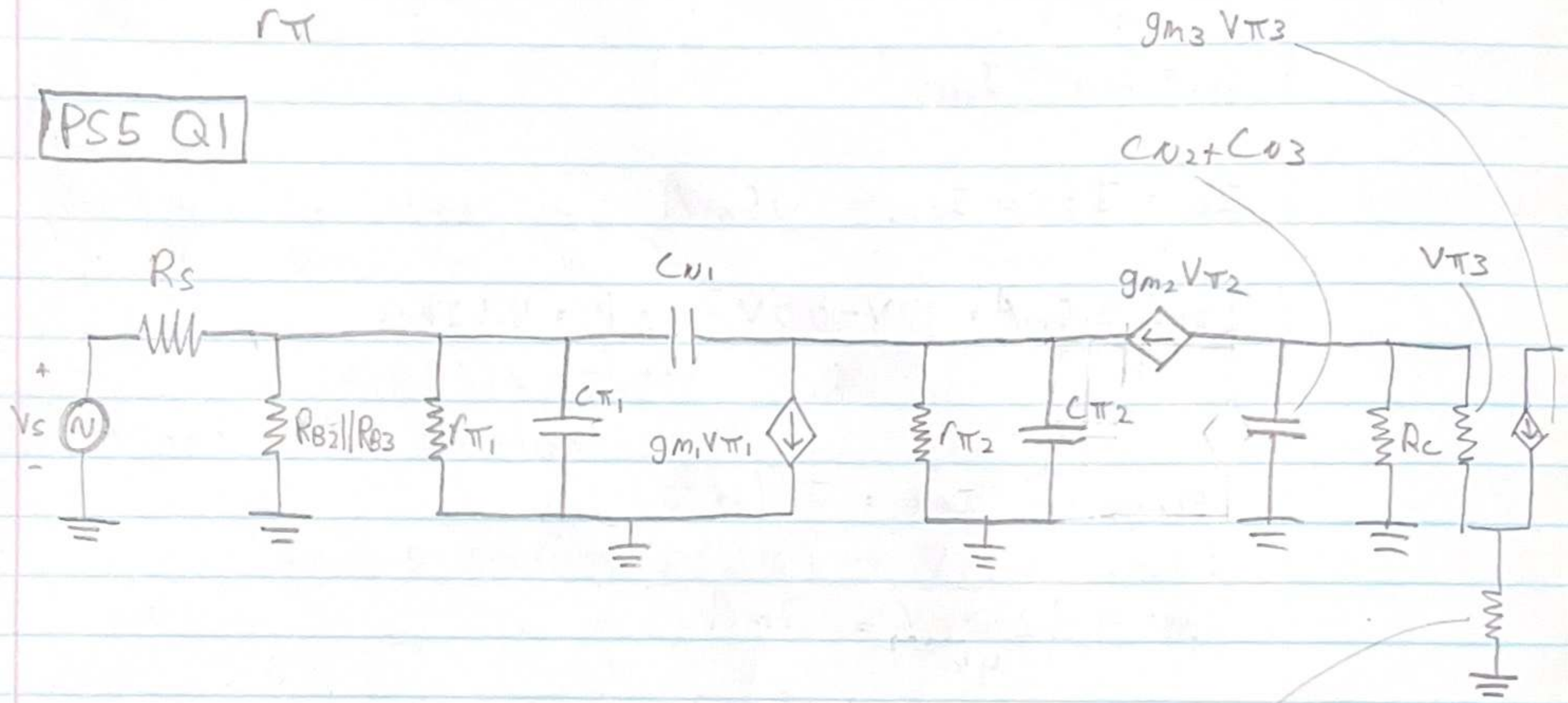

$$\omega_{HP1} = \frac{1}{R_S||R_{B2}||R_{B3}||r_{\pi1}(C_{\pi1}+2C_{N1})}$$

$$\omega_{HP2} = \frac{1}{\left(\frac{r_{\pi2}}{1+\beta_2}\right)(C_{\pi2}+2C_{N1})}$$

$$\omega_{HP3} = \frac{1}{[R_C||(r_{\pi3}+(1+\beta_3)R_{E3}||R_L]\,(C_{N2}+C_{N3})}$$ [Lowest HFP (dominant)]

Lecture 15

11/4/19
LEC

PS6 Q1

a) $I_{(8k)} = \frac{12V - 2V}{8k\Omega} = \frac{10V}{8k\Omega} = 1.25mA$

$I_{C1} = I_{C2} \approx I_{(8k)}$

$I_{E1} = I_{E2} = I_{C1,2} = 1.25mA$

$I_{R1} = 2.5mA = \frac{12V - 0.7V}{R_1}$ $\therefore R_1 = 4.52k\Omega$

Because $I_{REF} = I_0\left(1 + \frac{2}{\beta}\right)$ negligible for large β

$I_{(4k)} = \frac{12V - 4V}{4k} = 2mA$

$I_{O2} = 4mA$

$R_2 = \frac{12V - 0.7V}{4mA} = 2.825K\Omega$

---

b) $I_{C1} = I_{C2} = 1.25mA$

$I_{C3} = I_{C4} = 4mA$

$g_{m1} = g_{m2} = 50m\mho$

$g_{m3} = g_{m4} = 80m\mho$

$r_{\pi 1} = r_{\pi 2} = \frac{100 \cdot 25mV}{1.25mA} = 2k\Omega$

$r_{\pi 3} = r_{\pi 4} = 1.25k\Omega$

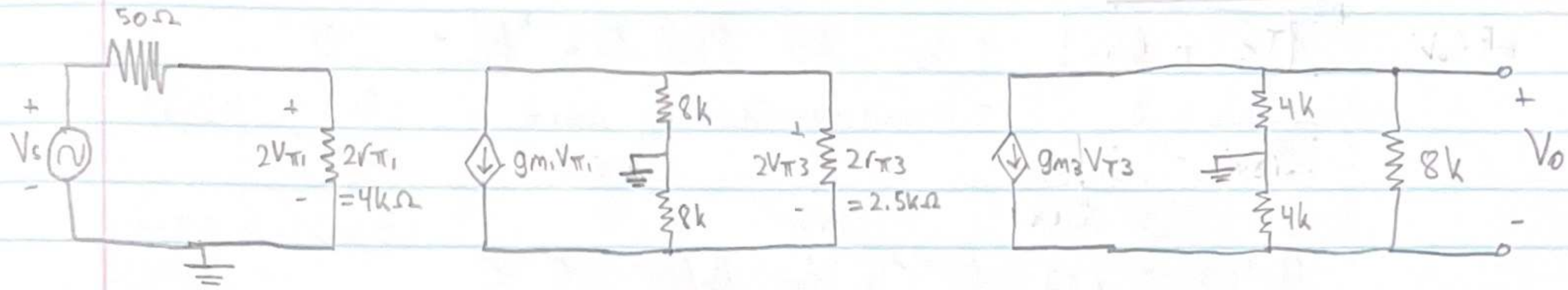

$$A_M = \frac{V_o}{V_s} = \frac{V_o}{V_{\pi 3}} \cdot \frac{V_{\pi 3}}{V_{\pi 1}} \cdot \frac{V_{\pi 1}}{V_s}$$

$$\frac{V_o}{V_{\pi 3}} = -g_{m3}(8k \| 8k) = -320 \tfrac{V}{V}$$

$$\frac{2V_{\pi 3}}{V_{\pi 1}} = -g_{m1}(2.5k \| 16k) = (50)(2)(2.16) \rightarrow \frac{V_{\pi 3}}{V_{\pi 1}} = -54.1 \tfrac{V}{V}$$

$$\frac{V_{\pi 1}}{V_s} = \frac{2V_{\pi 1}}{V_s} \cdot \frac{1}{2} = \frac{4k}{4.05k} \cdot \frac{1}{2} \approx \tfrac{1}{2} \tfrac{V}{V}$$

$$\therefore \boxed{A_M = 8640 \tfrac{V}{V}}$$

Lecture 16

11/5/19
LEC

** $\boxed{\text{Test 03}}$ → up to PS6 Q1 *Not Q2

PS5 Q3

Match zero of C_E to Pole of C_{C1}

$$1500\ rad/s = \frac{1}{C_E\left(4k \,||\, \frac{r_{\pi 1} + 50 \,||\, R_{B1} \,||\, R_{B2}}{1+\beta_1}\right)}$$

$$1500 \approx \frac{1}{C_E\left(4k \,||\, \frac{5k+50}{201}\right)}$$

$$\approx \frac{1}{C_E(25\Omega)}$$

$$\therefore \boxed{C_E = 26.6nF}$$

$$W_{zCE} = W_{pCC1} = \frac{1}{26.6nF(4k\Omega)} = \boxed{9.375\ rad/s}$$

$$9.375 rad/s = \frac{1}{C_{C1}\left[50 + R_{B1} \,||\, R_{B2} \,||\, (r_\pi + (\beta_1+1)4k)\right]}$$

$$R_{B1} = \frac{12V - 4V - 0.7V}{0.1mA} = \boxed{73k\Omega}$$

$$R_{B2} = \frac{4 + 0.7V}{0.095mA} = \boxed{49.5k\Omega}$$

$$C_{C1} = \frac{1}{9.375(28.5k)}$$

$$\therefore C_{C1} = \boxed{3.8nF}$$

PS5 Q2

$I_{E1} = 2.5mA$

$I_{E2} = 10mA$

From given voltages $I = \frac{V}{R}$

$\beta_1 = \beta_2 = 100$

Not Specified:

$\beta = 100$

$C_\pi = 10pF$

$C_\mu = 1pF$

$V_{BE} = 0.7V$

$g_{m1} = 100m\mho$ $\quad r_{\pi 1} = 1k\Omega$

$g_{m2} = 400m\mho$ $\quad r_{\pi 2} = 250\Omega$

$$W_{LP3} = \frac{1}{\left[22\Omega + 930\Omega \,\|\, \frac{250\Omega + 2k\Omega}{\beta + 1}\right] C_\pi} = \boxed{2300 \text{ rad/s}}$$

11/7/19 LEC

Lecture 17

PS5 Q2 Cont'd

$$W_{HP1} = \frac{1}{47.5\Omega \cdot 121pF} = \boxed{1.74 \times 10^8 \text{ rad/s}}$$

$$W_{HP2} = \frac{1}{1.1k \cdot 2pF} = \boxed{4.55 \times 10^8 \text{ rad/s}}$$

$$A_M = \boxed{-94 \tfrac{V}{V}}$$

** $C_{\pi 2}$ dissapears by Pole-Zero Cancellation

** Test 03 → Up to SS. 14

Lecture 18

11/19/19
LEC

PS7 Q4

$V_{\pi 1} = 64.6k$ $\quad g_{m1} = 1.55 m\mho$
$V_{\pi 2} = 5.81k$ $\quad g_{m2} = 17.2 m\mho$
$V_{\pi 3} = 12.9k$ $\quad g_{m3} = 7.76 m\mho$

PS7 Q5

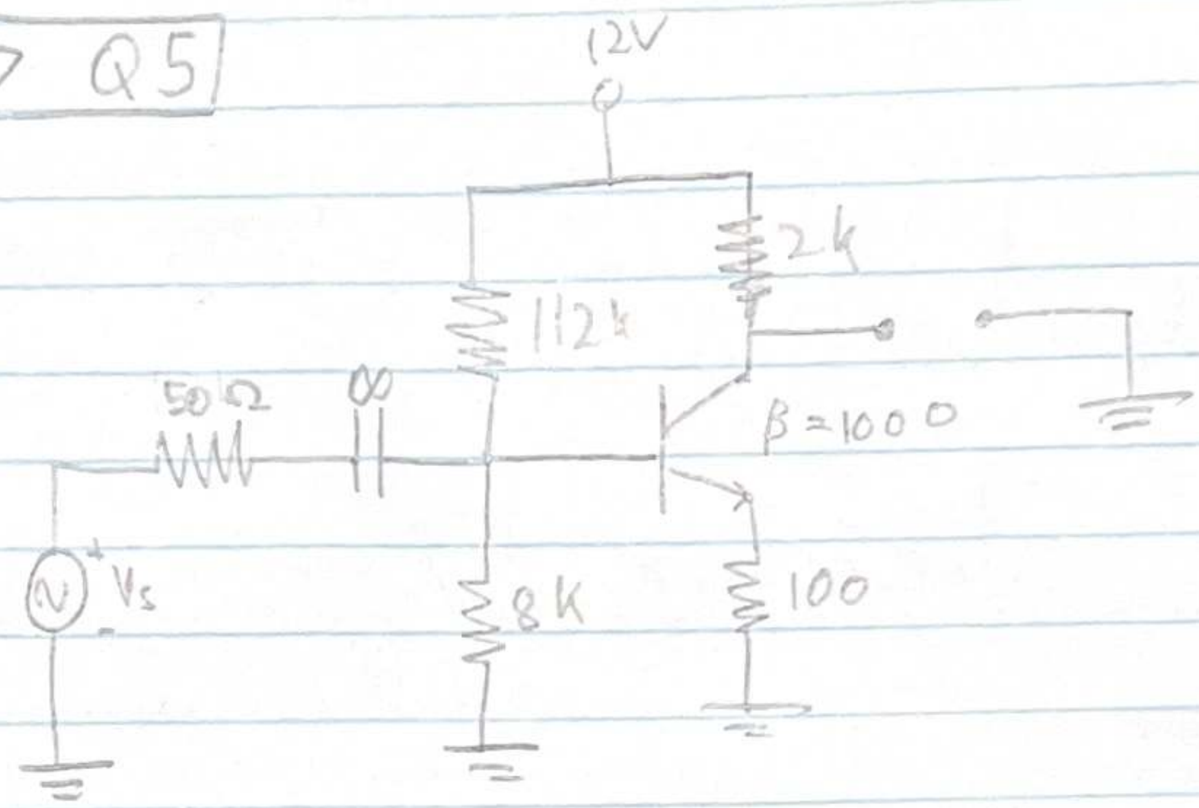

$$V_{BB} = \frac{12V \cdot 8k}{112k+8k} = 0.8V$$

$$R_{BB} = \frac{112k \cdot 8k}{120k} = 7.47k\Omega$$

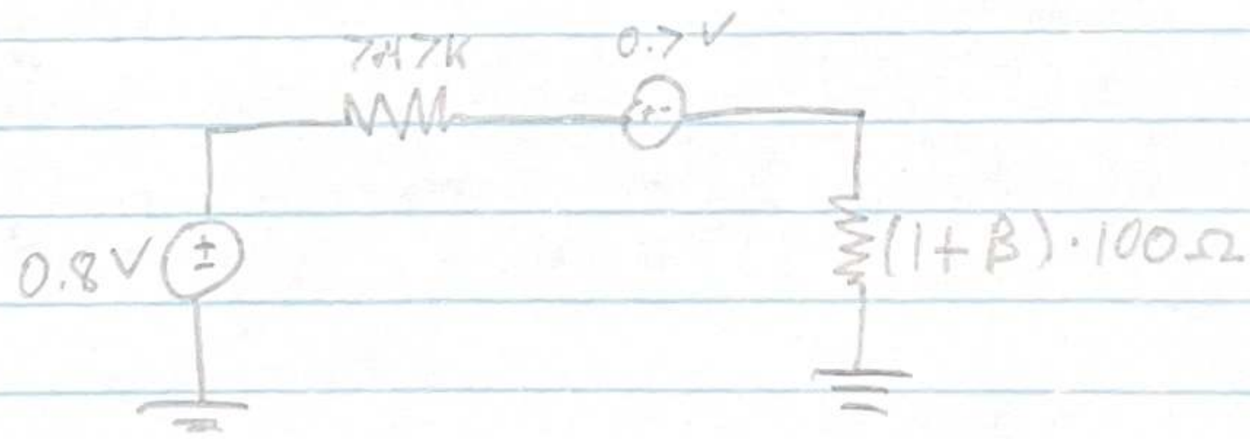

$$I_B = \frac{0.8V - 0.7V}{7.47k + (1+\beta)(100)} = 0.93nA$$

$I_C = 0.93mA$ $\quad r_\pi = 26.9k\Omega$ $\quad g_m = 37.2m\mho$